33 HIACE (RHD)

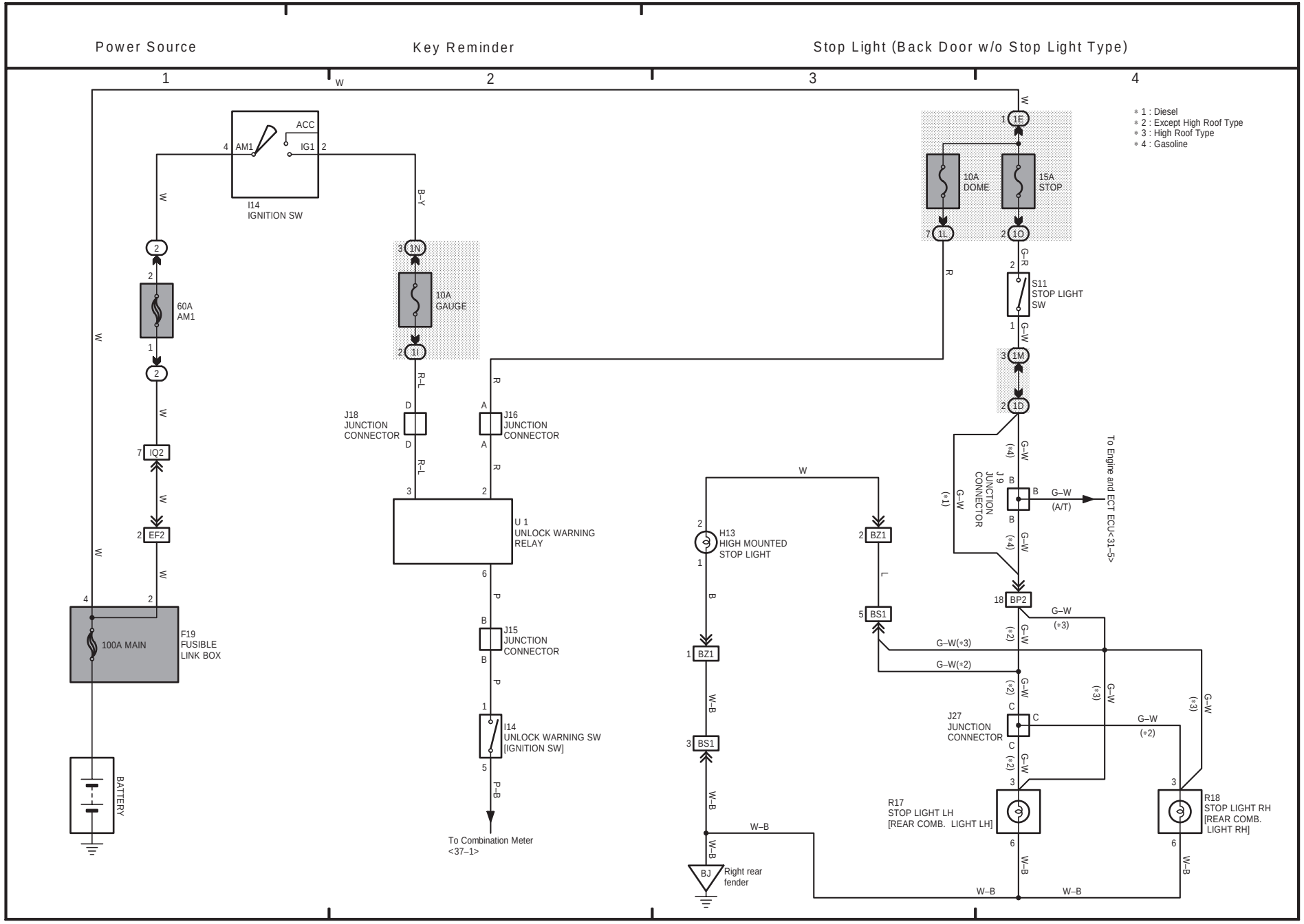
Power Source
Key Reminder
Stop Light (Back Door w/o Stop Light Type)
1
2
3
4
∗ 1 : Diesel
∗ 2 : Except High Roof Type
∗ 3 : High Roof Type
∗ 4 : Gasoline
ACC
AM1
IG1
I14
IGNITION SW
60A
AM1
IQ2
EF2
100A MAIN
F19
FUSIBLE
LINK BOX
BATTERY
10A
GAUGE
J18
JUNCTION
CONNECTOR
J16
JUNCTION
CONNECTOR
U 1
UNLOCK WARNING
RELAY
J15
JUNCTION
CONNECTOR
I14
UNLOCK WARNING SW
[IGNITION SW]
To Combination Meter
<37–1>
10A
DOME
15A
STOP
S11
STOP LIGHT
SW
J9
JUNCTION
CONNECTOR
To Engine and ECT ECU<31–5>
H13
HIGH MOUNTED
STOP LIGHT
BZ1
BS1
BP2
J27
JUNCTION
CONNECTOR
R17
STOP LIGHT LH
[REAR COMB. LIGHT LH]
R18
STOP LIGHT RH
[REAR COMB.
LIGHT RH]
BJ
Right rear
fender